Davidsmeyer & Paul GmbH

Elektronik

dp

GÜNTHER

Hot Runner Systems

Control unit

DP1/DP2

User manual

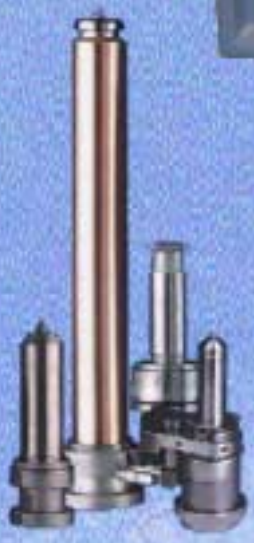

Contents:

1. General notes
1.1 Savety information

2. Operation
2.1 Start up
2.2 Display of temperature
2.3 Display during percentage mode
2.4 Changing the control modes (thermocouple, percentage control mode, off)
2.5 Load default
2.6 Fault reports

3. Parameter setting
3.1 Parameter menu – flow chart
3.2 Configuration menu – flow start

4. Further function
4.1 Softstart
4.2 Starting ramp
4.3 Set value lowering
4.4 Switching power control
4.5 Counter operating time

5. Connection of control circuits

6. Installation and start up

7. Table of faults and defects

8. Specifications

9. Appendix EG – declaration of conformity

10. Addresses

© Copyright DAVIDSMEYER & PAUL GmbH Elektronik

GÜNTHER Hot Runner Control Unit DP1/DP2

1. General notes

The two zone control unit DP2 is designed for temperature regulation of two hot runner nozzles. It may be applied for the control of any 230V-load circuit of hot runner systems. The unit's output of up to 3500W allows the operation of different 230V-loads by means of the ″Pulsgruppensteuerung″ (Switching Power Control).

Please note that this unit is not designed for temperature control of low voltage nozzles (5V or 24V).

On the rear the illuminated master key, the modular plug and the fuse are positionized. Each heating circuit is controlled via solid-state-relays in ″Pulsgruppenbetrieb″ (Switching Power Control mode)

Caution !
The load fuse F1 may not exceed a maximum current of 16A!

The 1-zone controller unit DP1 is a smaller version of the 2-zone control unit DP2. It is basically constructed like the DP2, yet it operates only one circuit.

1.1 Safety information

The DP1/DP2 is built and tested according to safety standards declared by the European Council of Assimilation of Legal Regulations (cf. appendix) and has left the factory in perfect condition. In order to maintain this condition and for safe operation, please read this User Manual carefully and follow the instructions.
Ensure that your local supply voltage corresponds to the unit's nominal voltage before you switch on. For safe operation, the unit must be plugged into an earthed socket. Any disconnection of the earthed conductor, e.g. by using an extension flex without earthed conductor, may cause severe danger!

Caution: Always disconnect the unit before opening! Pull mains plug!
This control unit contains hazardous voltage. Any repair and service work must be carried out by qualified and authorised personnel only. The components inside the unit are maintenance-free for our customers. They are exclusively serviced by Günther Hot Runner Systems.

For operation of the control unit, a fuse protected socket must be used. Both the DP1 and DP2 are equipped with a one phase 16A-plug. Please ensure that the sockets used are protected sufficiently.

Note:
Refer to the chapter on installation and start-up for further information. Always unplug the unit before touching the components inside! (Pull mains plug!)

2. Operation

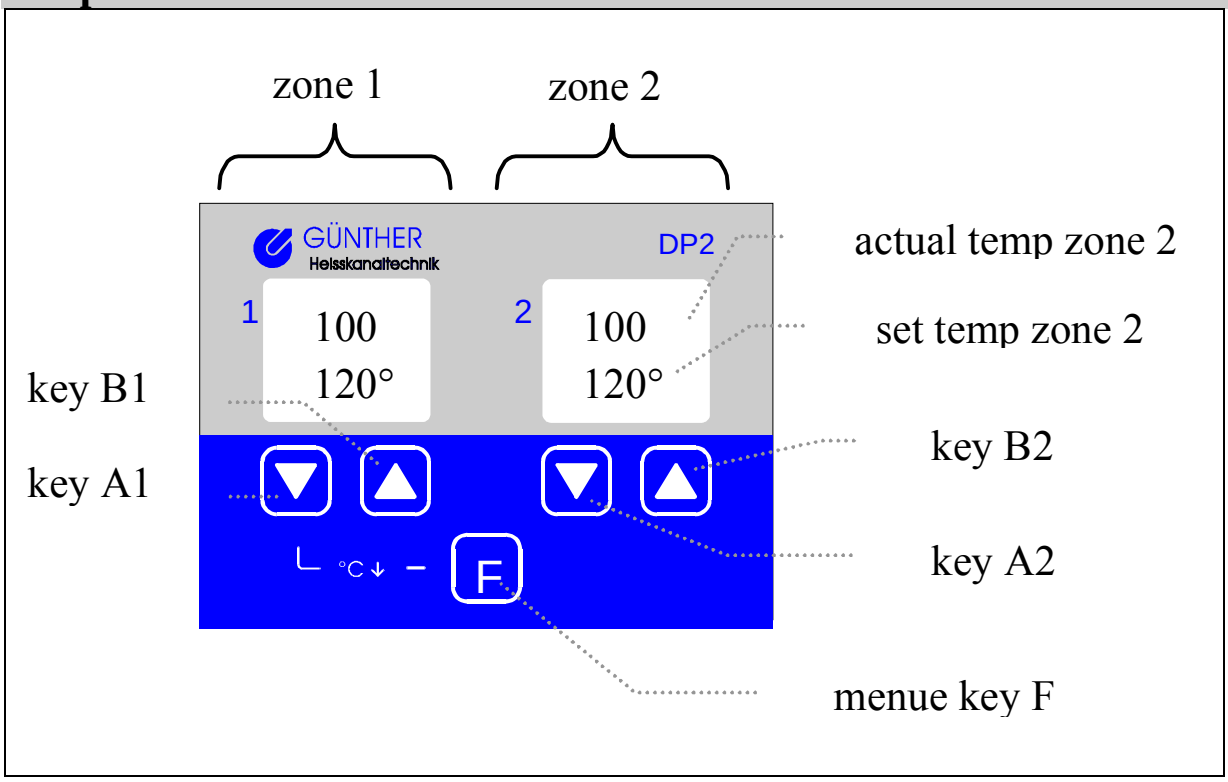

The set temperature can be adjusted by pressing the up- and down-keys at each zone. You can switch between the three operation modes by pressing the two keys (A_ and B_) of a zone simultaneously.
If you change settings in the parameter menu, the left display shows the parameter settings for all zones.
The fault reports of each zone are displayed on the defect zone display.
You enter the parametermenu by pressing key **F** (see chapter 3).
By the one-zone version DP1, the second zone and the right display has no function. Besides that, the function don't differ.

2.1 Start up

After switching on, the controller's left LED display (zone 1) shows the start report: the top line indicates the number of zones connected to the controller (DP2 – two zone controller); the bottom line indicates the number of software version. After the start report, the DP1/DP2 automatically runs a system check then starts the operating mode.

© Copyright DAVIDSMEYER & PAUL GmbH Elektronik

2.2 Display of temperature

The temperature controller displays temperatures on two 4-digit LED displays. During thermocouple control mode, the first line displays the actual temperature and the second line displays the set temperature (max. 500°C).
The DP1/DP2 offers the opportunity to choose between °C and °F. A set value of 570°F, for example, would be displayed as „570F“ on this set value indicator.

2.3 Display during percentage control modes

The DP1/DP2 can be operated in percentage control mode in order to avoid a long-term production halt in the event of a thermocouple failure.
percentage control mode: range of 0-100% possible
Keys:
Key A1,A2: Decrease the percent value (set value current control)
Key B1,B2: Increase the percent value (set value current control)

2.4 Changing the control modes

The DP1/DP2 can be operated in percentage control mode in order to avoid a long-term production halt in the event of a thermoelectric couple failure. By pressing the keys A1 and B1 for zone 1 (or keys A2 and B2 for zone 2) simultaneously you can switch between thermocouples, percentage control mode and zone off.

Note:
If the DP1/DP2 detects a damaged or disconnected thermocouple during operation, it automatically disconnects the heater circuit and displays a fault report. If you confirm this report, the unit afterwards automatically switches into percentage control mode.

2.5 Loading default values

The system parameters of the DP1/DP2 can be set in the parameter menu. In case of an error in your parameter configuration, the unit offers the possibility to load standard default values. For that purpose, hold down keys A1,B1 and F during power-on of the control unit.

display	meaning
LOAd dEF.	The display ´load defaults´ appears after you choose to set the factory defaults for approx. 5 sec.

2.6 Fault reports

During its operation, the controller DP1/DP2 runs serval diagnostic routines. These includes checking the thermocouples. Any fault or defect will be indicated by a short report. The heater circuit will always be disconnected in case of a fault or defect.

Note:
System faults can be confirmed by pressing key ‚**F‘.**

The following fault reports may arise during the operation of the DP1/DP2:

display	**meaning**
No Sens	**Thermocouple failure** The unit detected that a thermocouple is unconnected or interrupted on one wire. Please check the wiring of your thermocouple!
Pol. tH.1	**Polarity error at thermocouple connection** Polarity error at the connection of thermocouple of control circuit 1. The thermocouple seem´s to be connected with wrong polarity. Please check the wiring of your thermocouple!
Note: If you confirm by pressing key F after fault report thermocouple damaged or polarity error the DP1/DP2 automatically switches into percentage control mode. If you are able to solve the problem the fault before confirming with key F the controller remains in thermocouple control mode.	
Err. tH.1	**Thermocouple short circuit** A short circuit in control circuit 1 has occurred. This fault can be detected after a period of min. 90 sec.. Please check the wiring of your thermocouple!
t.Hi Ch1	**Over temperature** The temperature of control circuit 1 crosses the security mark. The max. allowed temperature can be set as systemparameter and is standardly set to 500°.
Err. Temp	**Ambient temperature above limit** The unit detected an ambient temperature of above 70°C.

3. Parameter setting

The operation of the controller depends on the setting of the parameters. For easy access, the most important parameters are displayed on a menu. The parameter menu is divided into a user menu and a configuration menu, the access to which is restricted by a password. In the user menu only non-critical system parameters can be changed.

Caution:
The access to configuration data is protected by a password. The configuration should only be changed by authorised and qualified personnel. Inexpert configuration may cause damage of the hot runner system. The person who sets unit into operation is responsible for correct configuration of the controller.

© Copyright DAVIDSMEYER & PAUL GmbH Elektronik

3.1 Flow chart of parameter menu

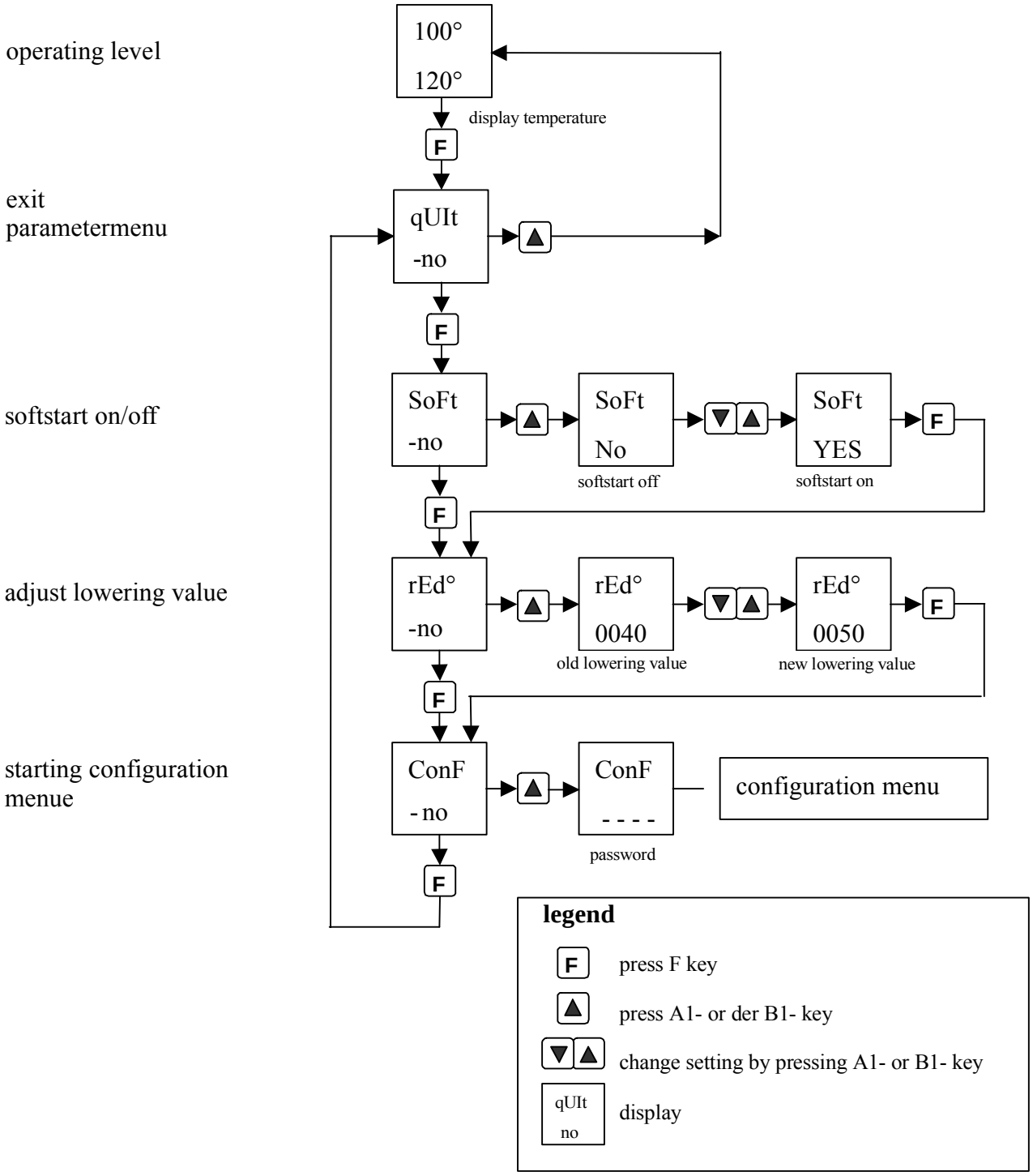

You enter the parameter menu by pressing key **F.** Each further use of this key F leads you to the next menu item. With keys A1 or B1 you can activate each menu item. The display then switches from **no** to **YES.**
For information on the configuration menu please refer to chapter 3.3.

display	meaning
qUIt	**exit menu** You can quit the parameter menu by selecting quit. Press key A1 or B1 if you want to return to the normal operating level. You automatically quit the parametermenu, if for approx. 10 seconds no key is pressed.
SoFt	**softstart** You can select the softstart function for 230V nozzles by entering the menu SOFT. Here you can enable or disable the softstart function.
rEd° rEdA	**set value lowering** The menu item ‚set value lowering‘ („rEd.°“ or „rEd.A“) enables you to set the lowering temperature or the lowering current. This function ‚set value lowering‘ is switched by the pressing the keys A1 and F simultaneously.
ConF	**configuration menu** The menu item ´configuration menue´ („CONF.“) enables you to enter the configuration menu. This menu is protected by a password. Please refer to the chapter 3.3

© Copyright DAVIDSMEYER & PAUL GmbH Elektronik

3.2 Flow chart of configuration menu

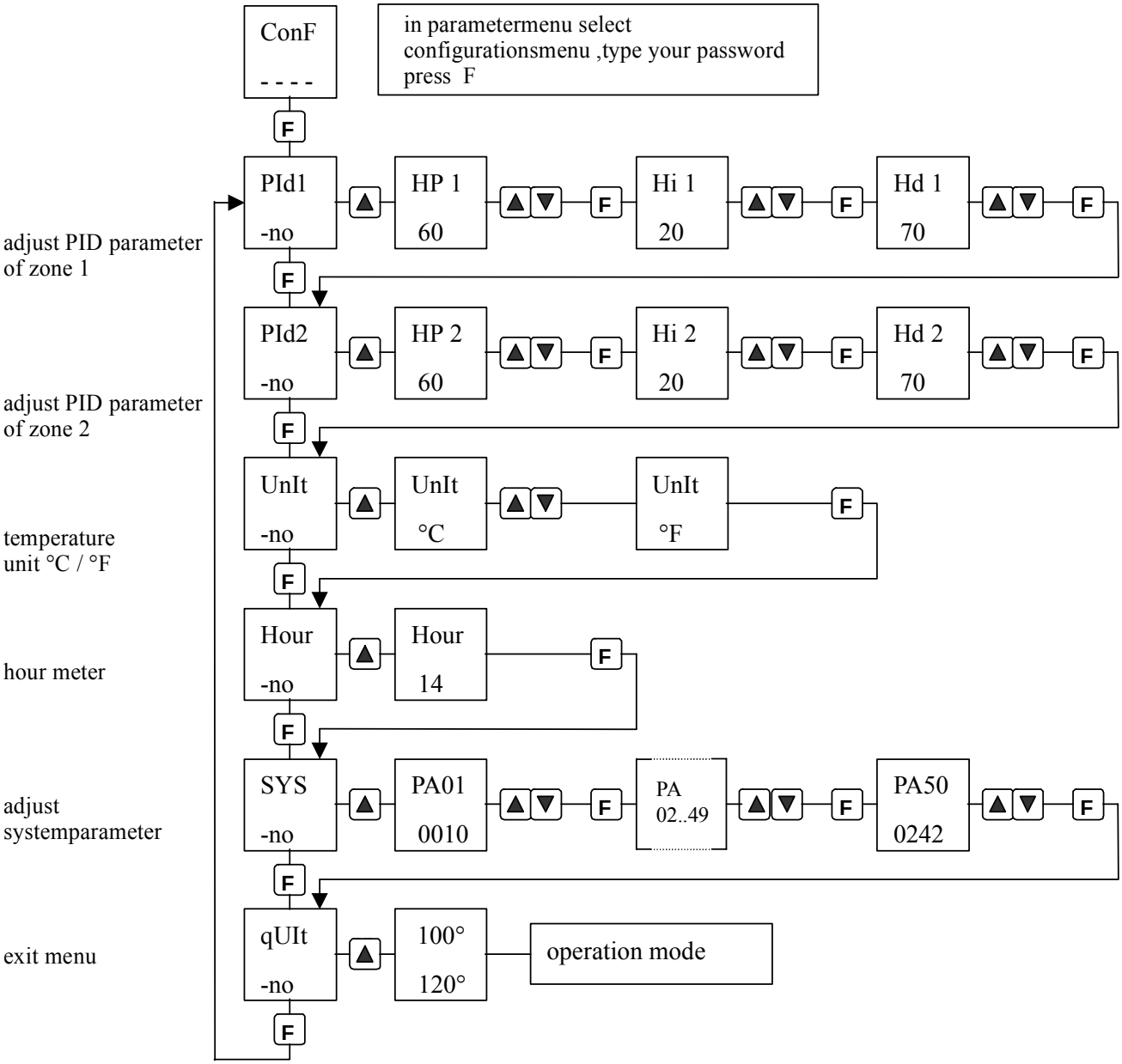

In the configuration menu, the system parameters of controller DP1/DP2 can be set. Besides the

various items for frequently used parameters, the item ‚system‘ is therefore protected by an additional password. Changes of system parameters must be carried out by authorised and qualified personnel.

display	meaning
ConF - - - -	**configuration menu** You find the configuration menu in the parameter menu item (‚CONF.‘). To start the configuration menu you must enter the password. You have to enter the digits of the passwords starting right by pressing A1 or B1. Enter by pressing the F key.
Pid1 Pid2	**PID parameters** Item PID1 allows to change the PID regulation parameters for each zone manually. At the two zone controller DP2 there is a second menu item to select the PID parameters for the second zone.
UnIt	**temperature unit** In the menu item temperature unit you can choose between °C (Celsius) and °F (Fahrenheit).
Hour	**counter operating time** In the menu item hour you can find the number of operating hours.
SYS	**system parameters** The system parameters of the DP1/DP2 can be changed after entering the menu item ‚sys‘. The menu is protected by a password and enables you to set and change all system parameters. Changes of the system parameters should only be carried out by authorised and qualified personnel. You can load the standard default values as described in chapter 2.5, if your configuration of the system parameters proves inadequate or faulty.
qUIt	**exit menu** You can quit the parameter menu by selecting quit. Press key A1 or B1 if you want to return to the normal operating level. You automatically quit the parametermenu, if for approx. 10 seconds no key is pressed.

© Copyright DAVIDSMEYER & PAUL GmbH Elektronik

4. further functions

4.1 Start up procedure

With 230V loads connected to a system, a softstart is necessary in order to remove the moisture from the thermoelectric couples. During the first phase of the softstart, the set value per cent is increased from 0 to 50%. The ramp time is adjustable – any adjustment must guarantee that at the end of the ramp a temperature of 105°C will be reached. During the hold time following this procedure, the DP1/DP2 sets the temperature to 105°C independent of the set value selected. During the hold time, the nozzles are dried out adequately, while keeping the thermic load as low as possible. The system performs the start-up procedure automatically after the control unit is switched on. The unit switches into normal operating condition immediately after the hold time.

4.2 Starting ramp

If you wish to heat up a cool zone, it is highly recommended that you do not use the max. power for reaching the desired operating temperature. The DP1/DP2 limitates the power output at the initial start-up and afterwards increases it to 100% over four steps, in order to keep the thermic stress as low as possible. After approx. 60 seconds the max. heating capacity is available.

4.3 Temperature lowering

During any long-term production halt it is advisable to lower the temperature of the zones. It is not necessary to adjust the temperature for each regulation zone – you can control the temperature of all zones simultaneously by pressing a lowering-hotkey. If you press the A1-key and the menu key F simultaneously, the set temperatures of all zones is lowered by a preset value. You can cancel the lowering by pressing the lowering key again.

4.4 Switching power control

The above mentioned phase control mechanism for continuous output control is provided specifically for hot runner nozzles. For the operation of 230V-heater circuits with very high output, the DP1/DP2 provides the Switching Power Control. The switching power control triggers a solid state relay. This way the 230V-heater circuits with just about any load can be controlled.
The Switching Power Control ensures that the desired output will practically continuously be activated. It´s main advantage over a traditional controller is an improvement of heating capacity, and thus better control qualities.

4.5 Counter operating time

The operating time of the DP1/DP2 is internally saved with resolution of 1 minute and may be read via the parameter menu.

operating time < 10 hours	display:	hours.min
operating time ≥ 10 hours	display:	hours

5. Connection of control circuits

On the rear of control unit a load connection plug is positioned. On this modular plug, up to 2 load connection modules can be assembled, depending on the version (DP1 or DP2). Each 230V-load circuit will be connected using these solid 20A-contacts. Refer to fig. 3.2 for information about the assignment of the connection points to the corresponding modules.

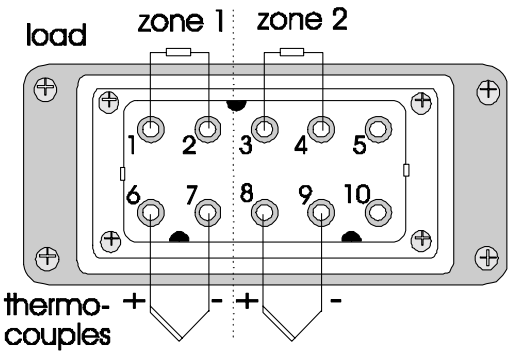

zone	1	2
load 1 (phase)	1	3
load 2 (neutral)	2	4
thermo +	6	8
thermo -	7	9

6. Installation and start-up

a) Installation

- Please position the unit where not heat accumulation will occur.
- Ensure that the sockets are sufficiently for connecting.
  The DP1 and DP2 needs a 16A-Schuko mains plug
- The load fuse may not exceed 16A.

b) Start-up

- To connect the heating circuit and thermocouples, plug in load connectors.
- Plug in mains plug for power supply.
- Press power switch.
- Set the desired set temperatures of all zones.
- During initial start-up you should activate each control point separately so that possible faulty connection of either load or thermoelectric couple may be detected.
- After switching on the control unit, please wait for a few minutes until all tools are heated up evenly.

© Copyright DAVIDSMEYER & PAUL GmbH Elektronik

7. Table of faults and defects

During the course of the operation, the DP1/DP2 is continually checking the control circuit for faults and defects. Any fault/defect detected is indicated on the display.

		Fault/Defect	**Possible Cause**	**Countermeasure**
A	Fault report ”no sensor 1”	Thermocouple of zone 1 or 3 defect	Thermocouple is not connected or interrupted	Check connection plug and -cable of thermoelectric couple
B	Fault report ”no sensor 2”	Thermocouple of zone 2 or 4 defect	Thermocouple is not connected or interrupted	Check connection plug and –cable of thermoelectric couple
C	Fault report ”Pol. TH 1”	Polarity error at thermocouple of zone 1 or 3	Polarity error at the thermo couple	Correct the polarity
D	Fault report ”Pol. TH 2”	Polarity error at thermocouple of zone 1 or 3	Polarity error at the thermo couple	Correct the polarity
E	Significant fluctuation of temperature (+/- 100 °C)		Thermocouple defect or load circuit not earthed	Check earthing of load circuit
F	Temperature increase not satisfactory		Load circuit (swapped)	Check assignment of heater circuit to thermoelectric couple

Caution:
With 230V-runners the heater circuits must be earthed sufficiently. Lack of earthling or insufficiently earthed tool/heating element may cause several errors in the temperature reading.

Note:
During initial start-up the **assignment of the zones** must be checked. For that purpose you should heat up the control circuits **one by one** and monitor the temperature rise.

8. Specifications

Nominal Voltage:	220V – 240V AC, 50/60Hz
Nominal Capacity DPT8:	3500 W, 1 x 16A
Stand-by Capacity :	approx. 10 VA
Load Connection DP1:	1 x heater circuit 230V / 16A, amphenol modular connector series C146...
Load Connection DP2:	2 x heater circuit 230V / 16A, amphenol modular connector series C146...
Mains Plug DP1/DP2:	3m, 16A-plug
Thermocouple Connection:	thermoelectric couple type L (FeCuNi), amphenol modular connector series C146...
Fuse:	FF 16A, 6,3 x 32mm, type Schurter Type SA; superfast for triacs
Regulation:	″Pulsgruppensteuerung″ (switching power control)
Storage Temperature:	up to 70°C
Operating Temperature:	up to 35°C
Protection Type:	IP 20
Dimensions (W, H, D):	125mm x 95mm x 290mm
Colour:	grey and blue (RAL 9018 and RAL 5015)

© Copyright DAVIDSMEYER & PAUL GmbH Elektronik

9. Appendix: EG- declaration of conformity

For the following below listed products:

GÜNTHER-Hot Runner Controller DP1 and DP2

we hereby confirm, that above listed products comply to all important (*) safety requirements that have been declared by the Council of Assimilation of Legal Regulations by the EC membership countries concerning electromagnetical conformity (89/336/EWG).

To verify these products to electromagnetical conformity the following standards were referred to:

EN 50081, Part 2
EN 50082, Part 2

The above mentioned products also comply to:

DIN EN 61010, part 1/03.94.

This declaration applies to all above listed products with the following production index:

Production Index A

The production index is the number behind the serial number on the identification label of the product. The identification label is located on the right side of the product.

DAVIDSMEYER & PAUL GmbH Elektronik
Technologiezentrum
Karl-Heinz-Beckurts-Str.13
D-52428 Jülich

Jülich, 01.09.2000

J. Marquardt
(Managing Director)

(*) Expressions recommended by "EMV-Rechtsvorschriften und ihre Anwendung in der Praxis", Franzis-Verlag, 1993

10. Adresses

(HEADQUARTER)

GÜNTHER Heisskanaltechnik GmbH

Industriegebiet Nord

Sachsenberger Straße 1

D-35066 Frankenberg (Eder)

Germany	
Phone	(++ 49) 64 51 50 08 0
Fax	(++ 49) 64 51 50 08 50
E-mail	info@guenther-heisskanal.de
Internet	www.guenther-hotrunner.com

Germany	**Phone / Fax / E-Mail**	
GÜNTHER Heisskanaltechnik GmbH Mr. Spork Sachsenberger Str. 1 **D-35066 Frankenberg**	Phone Fax E-mail	(++ 49) 01 73 8 67 83 35 (++ 49) 64 51 50 08 59 spork@guenther-heisskanal.de
GÜNTHER Heisskanaltechnik GmbH Mr. Stamm Sachsenberger Str. 1 **D-35066 Frankenberg**	Phone Fax E-mail	(++ 49) 01 72 9 41 12 26 (++ 49) 64 51 50 08 59 stamm@guenther-heisskanal.de
Verkaufsbüro Baden-Württemberg Nord Mr. Fritz Zedernstr. 23 **D-64653 Lorsch**	Phone Fax E-mail	(++ 49) 62 51 55 03 82 (++ 49) 62 51 55 03 83 fritz@guenther-heisskanal.de
Verkaufsbüro Baden-Württemberg Mitte Mr. Rasi Sonnenweg 4 **D-74372 Sersheim**	Phone Fax E-mail	(++ 49) 70 42 37 48 48 (++ 49) 70 42 37 48 49 rasi@guenther-heisskanal.de
Verkaufsbüro Baden-Württemberg Süd Mr. Waizmann Mühlenstraße 21 **D-79367 Weisweil**	Phone Fax E-mail	(++ 49) 76 46 91 54 90 (++ 49) 76 46 91 54 91 waizmann@guenther-heisskanal.de
WESCHU Mr. Grajer Edisonstr. 81 **D-90431 Nürnberg**	Phone Fax E-mail	(++ 49) 911 96 12 30 0 (++ 49) 911 96 12 30 50 thomas.grajer@weschu.de
Industrievertretungen Mr. Römhild Thomas-Mann-Str. 4 **D-98597 Breitungen**	Phone Fax E-mail	(++ 49) 36 84 88 68 0 (++ 49) 36 84 88 68 22 roemhild-IV@gmx.de
Verkaufsbüro Nord Mr. Dierks Mittelfeldweg 19a **D-27607 Langen**	Phone Fax E-mail	(++ 49) 47 43 91 29 90 (++ 49) 47 43 91 29 91 dierks@guenther-heisskanal.de

Worldwide	Phone / Fax / E-mail	
GÜNTHER France S.A. Mr. Demicheli 6 rue Jules Verne **F-95320 Saint Leu La Foret**	Phone Fax E-mail	(++ 33) 1 39 32 03 04 (++ 33) 1 39 32 03 05 m_demicheli@gunther-france.com
GÜNTHER U.K. Mr. Heendeniya 52 Lambardes, New Ash Green **GB-Longfield Kent DA3 8HU**	Phone Fax E-mail	(++ 44) 14 74 87 97 74 (++ 44) 14 74 87 30 63 info@gunther.co.uk
Trader Ingman Oy Mr. Ingman Strömsintie 23 A 1 **FIN-00930 Helsinki**	Phone Fax E-mail	(++ 358) 93 44 55 44 (++ 358) 93 43 40 52 0 jukka@traderingman.fi
GÜNTHER Hot Runner Systems Inc. Mr. Vander Noot 725 Hastings Lane **USA-Buffalo Grove, Illinois 60089**	Phone Fax E-mail	(++ 1) 84 72 15 78 74 (++ 1) 84 72 15 78 05 info@ghrsi.com
Federal Technology Corp. Mr. Yun 6F, No. 74 FU Shiang St., Chyan-Jenn Dist. Kaohsiung 806 **Taiwan R.O.C.**	Phone Fax E-mail	(++ 886) 7-72 10 17 1 (++ 886) 7-75 12 27 0 federal.khh@msa.hinet.net
Su-Pad Ltd. Mr. Sadeh 2, Hamelacha Street New Industrial Zone **IL-Rosh-Ha´ Ayn 48091**	Phone Fax E-mail	(++ 972) 3 90 23 90 2 (++ 972) 3 90 23 90 3 supadltd@netvision.net.il
Dipl.-Ing. Petr Sochor Ve Vilkách 1849 **CZ-347 01 Tachov**	Phone Fax E-mail	(++ 42 0) 1 84 72 39 66 (++ 42 0) 1 84 72 39 66 guenther.trysky-sochor@iol.cz
GÜNTHER S.C. Mr. Olszowski ul. Poznańska 14 m 33 **PL-00-680 Warszawa**	Phone Fax E-mail	(++ 48) 22 62 25 22 8 (++ 48) 22 62 97 77 4 guenther@pro.onet.pl
Dipl.-Ing. H. Günther Ges.m.b.H. Mr. Feik Speichmühlgasse 1 **A-2380 Perchtoldsdorf**	Phone Fax E-mail	(++ 43) 1 86 94 76 4 (++ 43) 1 86 94 76 47 guenther@kabsi.at
Basler Trade KFT Mr. Zastrow Postbox 25 **H-1581 Budapest**	Phone Fax E-mail	(++ 36) 12 39 05 17 (++ 36) 12 39 05 17 baslertrade@mail.datanet.hu
P.E.P. Plastics GmbH Mr. Elmer Wülflingerstrasse 59, P.O.Box 21 **CH-8407 Winterthur**	Phone Fax E-Mail	(++41) 52 222 72 26 (++41) 52 222 07 24 martin-elmer@bluewin.ch

Worldwide	**Phone / Fax / E-mail**	
Grupo Zoica Eduardo Campos Madrigal S.A. de V. C. Sadi Carnot No. 77 Col. San Rafael **MEX-D. F. 06470 Delg. Cuauhtemco**	Phone Fax E-mail	(++ 52) 55 46 40 14 (++ 52) 55 66 61 62 gpozoica@avantel.net
Center Plast Mr. Gonzalez-Palacio C/ Sant Gabriel, 17 Lo. 3 **E- 08950 Esplugues de Liob.**	Phone Fax E-mail	(++ 34) 93 47 37 71 3 (++ 34) 93 49 90 43 8 centerplast@airtel.net
Technisches Büro Bäcker Mr. Bäcker Pieter Lieftinckweg 20 **NL-1505 HX Zaandam**	Phone Fax E-mail	(++ 31) 75 68 18 00 0 (++ 31) 75 68 18 00 1 t.b.backer@wxs.nl
Battenfeld Hong Kong Ltd. Mr. Pechtl 2Fl. No.18 Dai Fat Street Tai Po Industrial Estate **Hong Kong-N.T. Tai Po**	Phone Fax E-mail	(++ 852) 26 66 91 40 (++ 852) 26 65 25 26 bathk@hk.super.net
Millutensil SRL Mrs. Just Oselieri Corso Buenos Aires 92 **I-20124 Milano**	Phone Fax E-mail	(++ 39) 02 29 40 43 90 (++ 39) 02 20 46 67 7 millut@tin.it
Brale Ltda. Mr. Holdschmidt Rua Joao de Barro, 52 **BR-83326-470 Pinhais-PR**	Phone Fax E-mail	(++ 55) 41 66 82 59 5 (++ 55) 41 66 82 59 5 brale@brale.com.br
DUMIS Mlaka d.o.o. Mr. Urana Oretnekova pot 9 **SL-4000 Kranj**	Phone Fax E-mail	(++ 386) 42 74 10 00 (++ 386) 42 74 10 01 dumis@siol.net
HH Plastkombi aps Mr. Hansen Østergade 24 D **DK-3200 Helsinge**	Phone Fax E-mail	(++ 45) 48 79 98 88 (++ 45) 48 79 80 16 mail@hh-plastkombi.dk
DELPLACE. Ltd Marc Delplace B. Sc.Eng. 6061 Thimens Boulevard **CAN-St-Laurent, QC H4S 1V8**	Phone Fax E-mail	(++1) 51 44 85 77 80 (++1) 51 44 85 11 28 marc.delplace@qc.aibn.com

© Copyright DAVIDSMEYER & PAUL GmbH Elektronik